Polymer Concrete Channel
Ductile Iron Grating [GGG50] D400+Locks

מדגם רשום
זכויות יוצרים שמורות

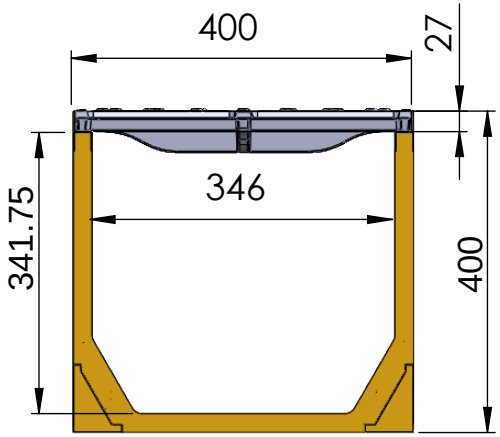

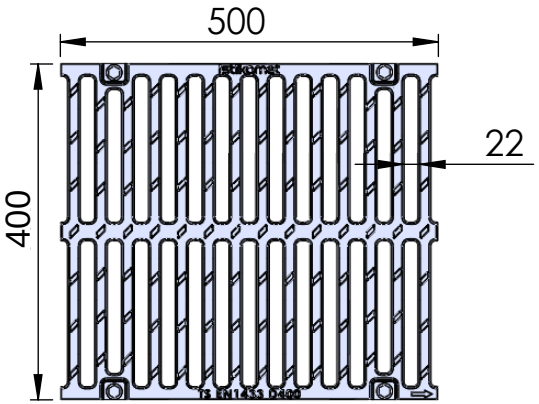

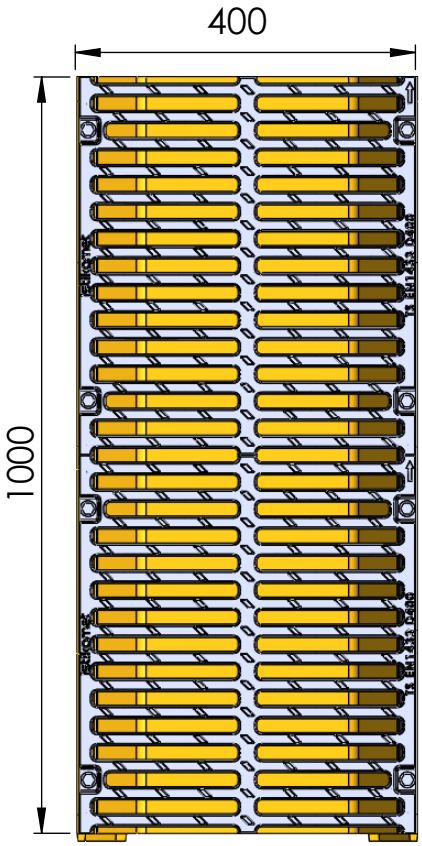

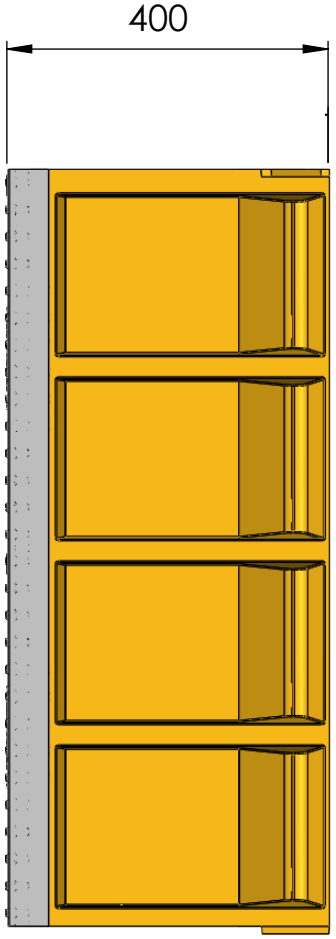

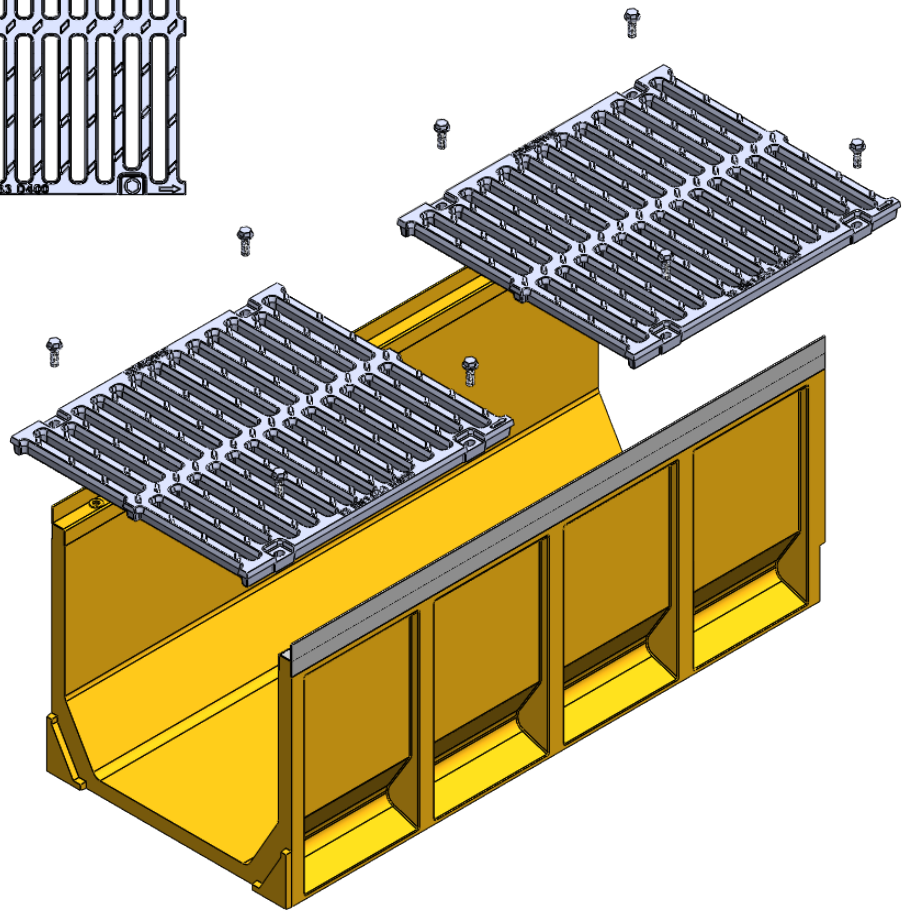

UNLESS OTHERWISE SPECIFIED: DIMENSIONS ARE IN MILLIMETERS	MODEL: iP400.l400		MENASHE BARUCH & PARTNERS LTD. INFRASTRUCTURE PRODUCTS www.mb-ltd.co.il
EN124 Part 2.2	MATERIAL: GGG50		TITLE: 40x40 Polymer Concrete Channel +D.I Grating D400
D400	Weight: 94 KG		
	Scale:		DWG NO. 1