Frame Weight: 120kg
Cover Weight: 110kg (x4)
Mid Cross Weight: 110kg
TOTAL: 670kg

מדגם רשום
זכויות יוצרים שמורות

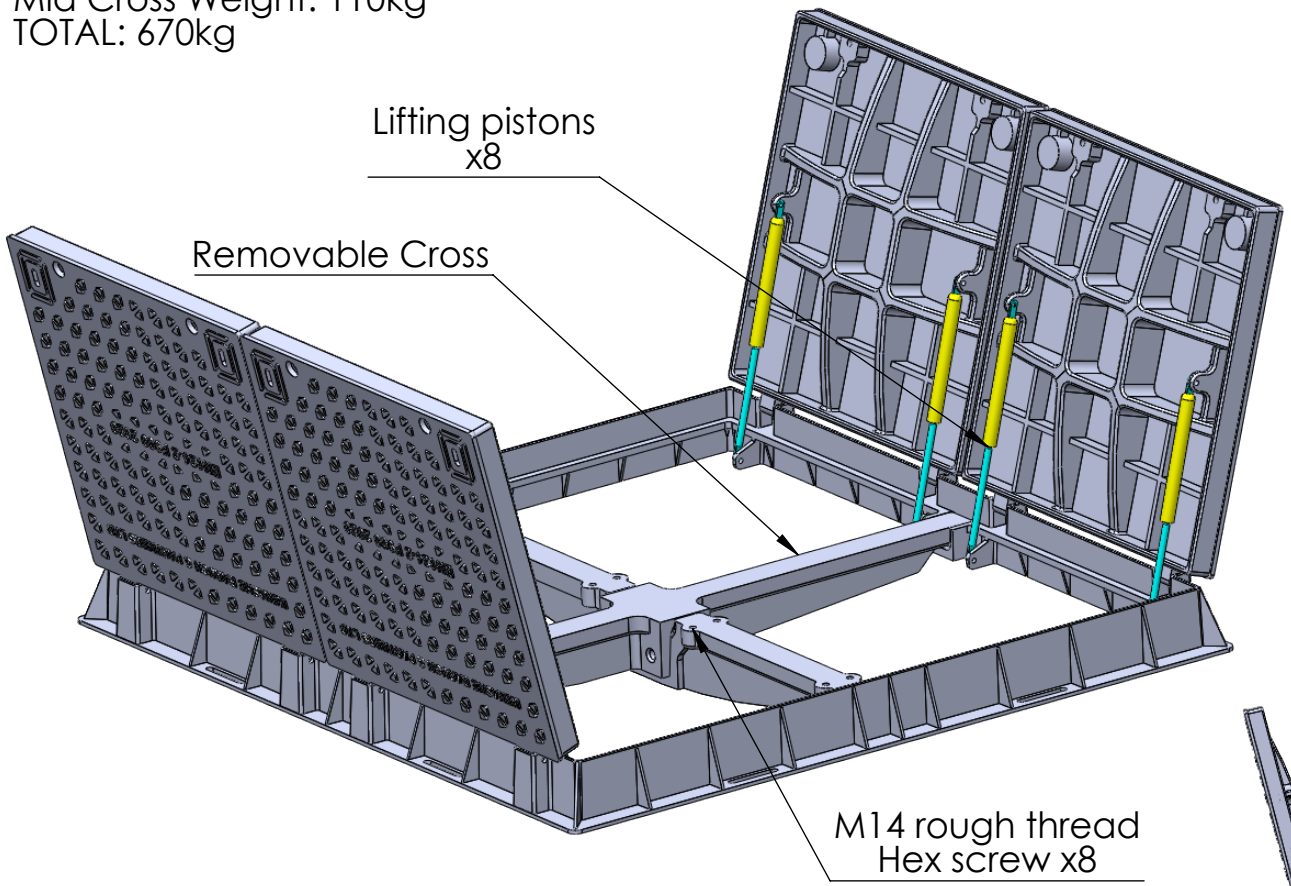

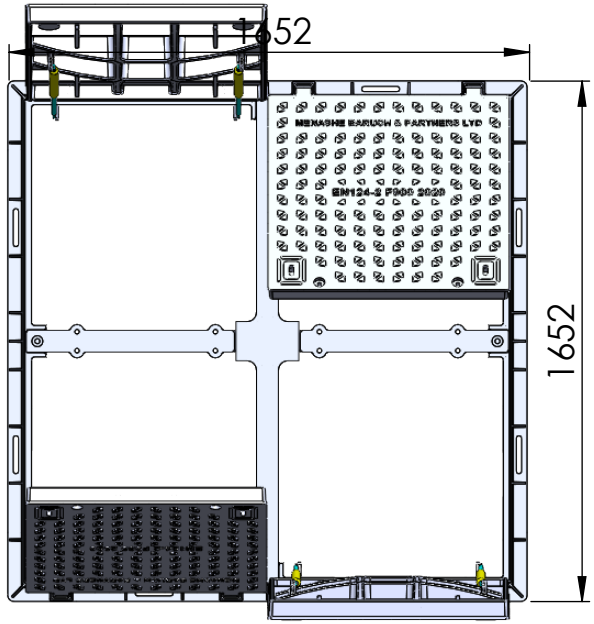

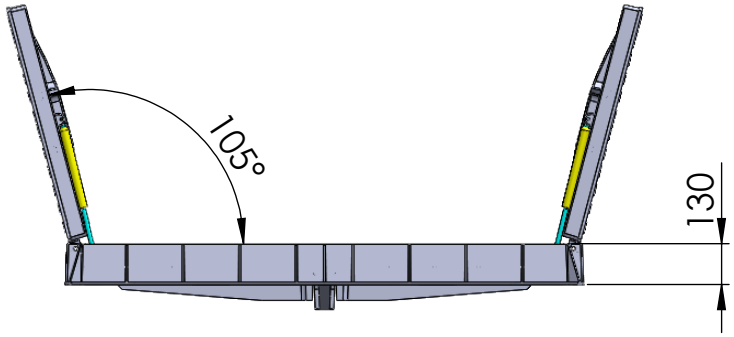

Lifting Effort ≤ 200[N]

UNLESS OTHERWISE SPECIFIED: DIMENSIONS ARE IN MILLIMETERS	MODEL: B4 Ghana F900 CO 1500x1500	mb	MENASHE BARUCH & PARTNERS LTD. INFRASTRUCTURE PRODUCTS www.mb-ltd.co.il
	MATERIAL: DI GGG 50		TITLE:
	Weight:		
	Scale:		DWG NO.